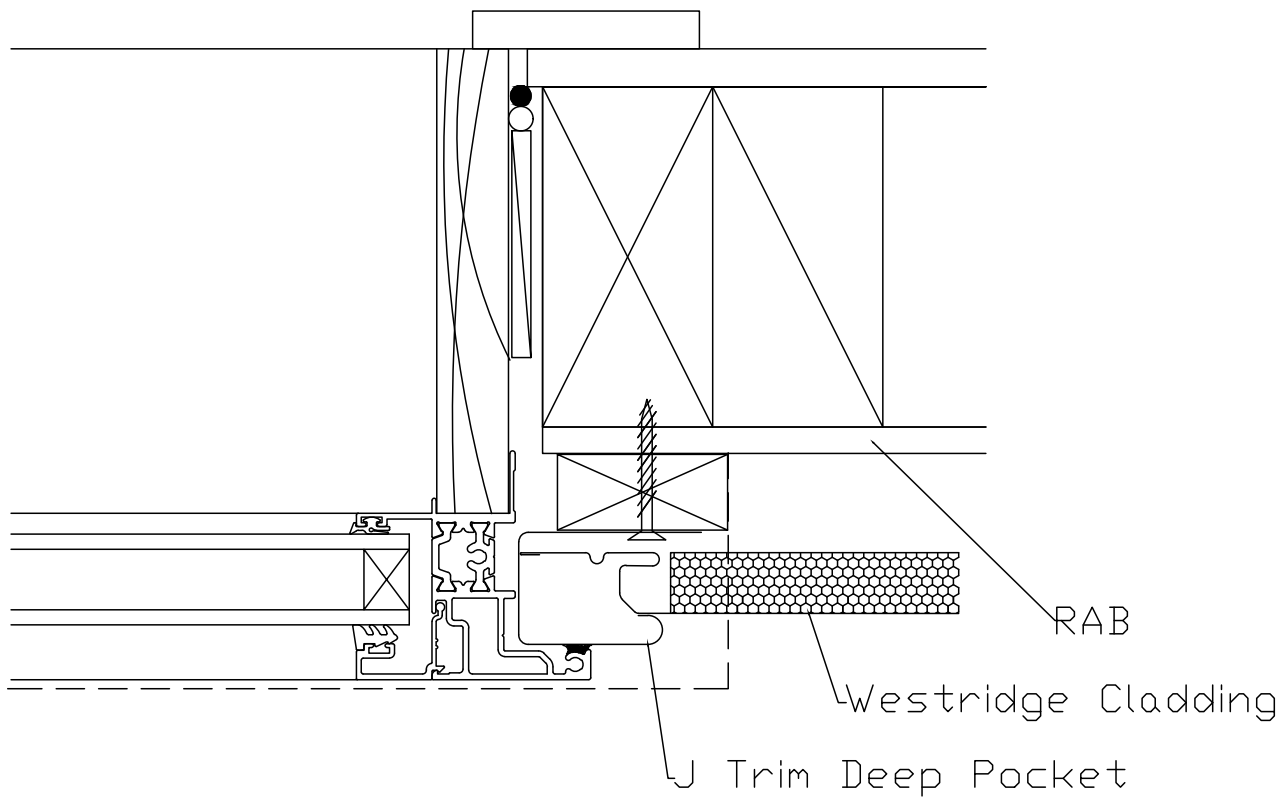

vinylcladding™ new zealand	Aluminium Window Jamb Reveal Fix Westridge RAB	DO NOT SCALE FROM DRAWINGS Contact VCNZ for Exact Dimensions 0800 MITTEN Detail No: WRRV-C-07